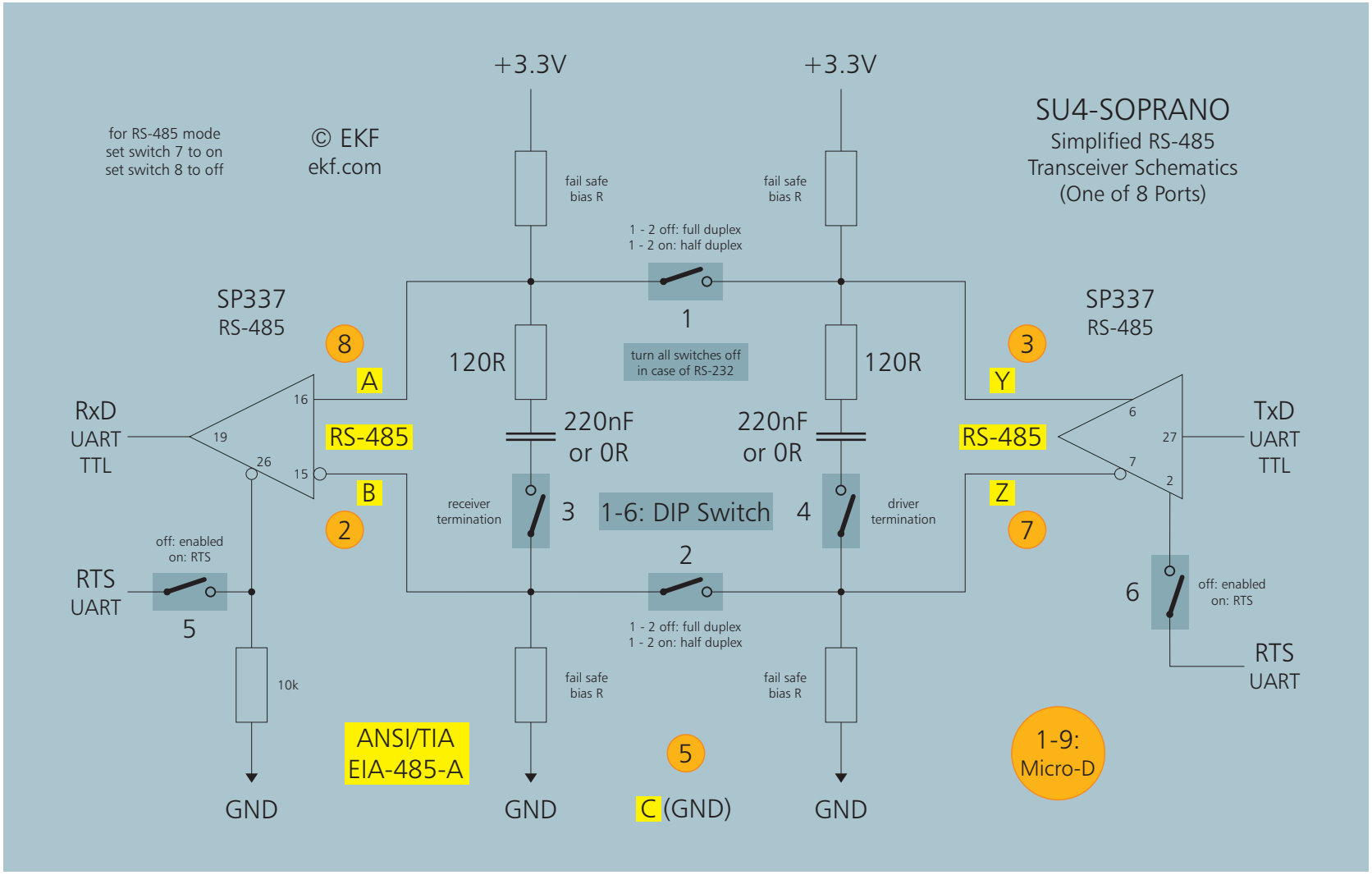
SU4-SOPRANO
Simplified RS-485
Transceiver Schematics
(One of 8 Ports)
© EKF
ekf.com
for RS-485 mode
set switch 7 to on
set switch 8 to off
+3.3V
+3.3V
fail safe
bias R
fail safe
bias R
1 - 2 off: full duplex
1 - 2 on: half duplex
1
turn all switches off
in case of RS-232
SP337
RS-485
SP337
RS-485
8
A
3
Y
120R
120R
RxD
UART
TTL
16
19
26
15
RS-485
220nF
or 0R
220nF
or 0R
RS-485
6
27
7
2
TxD
UART
TTL
B
2
receiver
termination
3
1-6: DIP Switch
4
driver
termination
Z
7
off: enabled
on: RTS
RTS
UART
5
2
6
off: enabled
on: RTS
1 - 2 off: full duplex
1 - 2 on: half duplex
RTS
UART
10k
fail safe
bias R
fail safe
bias R
ANSI/TIA
EIA-485-A
5
1-9:
Micro-D
GND
GND
C (GND)
GND